USED AT:	AUTHOR: AMC Integration Support	DATE: 12/2/97	WORKING	READER	DATE	CONTEXT:
	PROJECT: Define Wholesale Logistics Processes	REV: 6/10/98	DRAFT			
			RECOMMENDED			
	NOTES: 1 2 3 4 5 6 7 8 9 10		PUBLICATION			A1.2.1.4.2

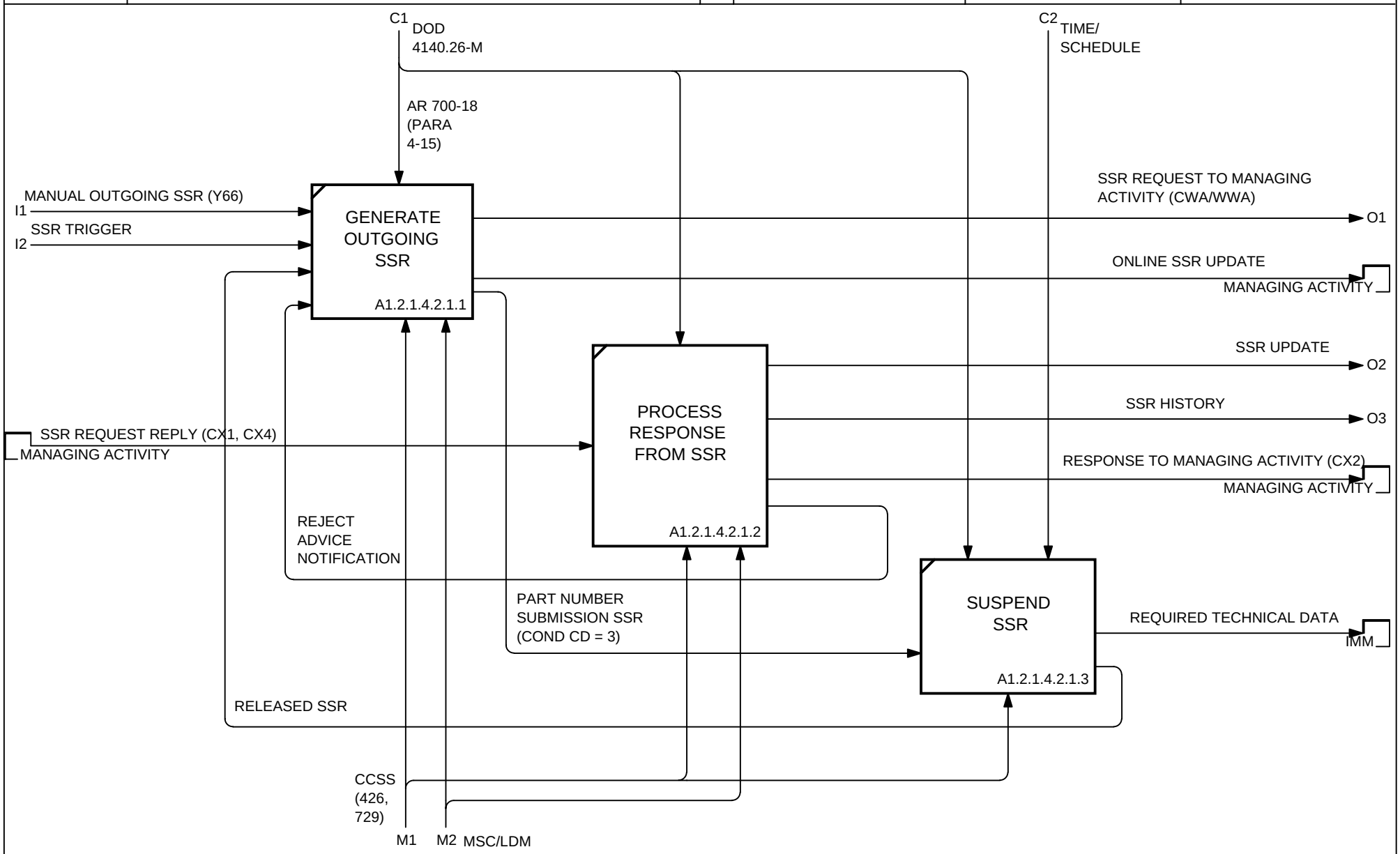

NODE:	TITLE:	NUMBER:
A1.2.1.4.2.1	DEVELOP & MODIFY OUTGOING SSR	